LAWRENCE®
HARDWARE INC.

LH404H Heavy Duty “Adjustable” roller latch (With “T” Strike)

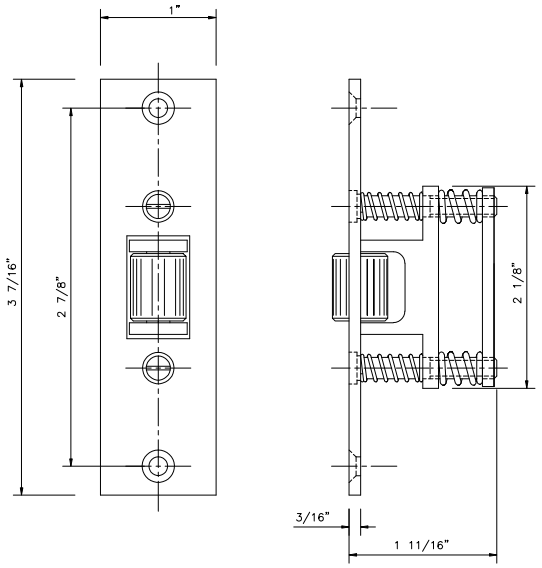

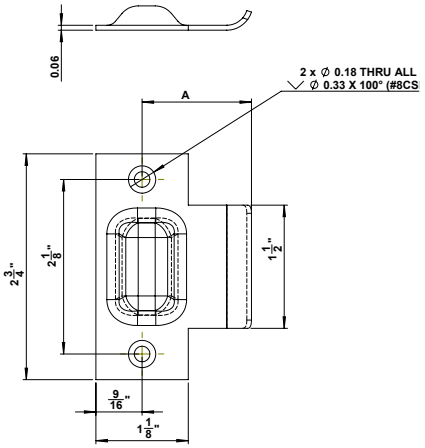

Not to Scale

Phone 1-800-435-9568 www.lawrencehardware.com Fax 1-800-892-7026